World Applied Sciences Journal 7 (1): 86-93, 2009
ISSN 1818-4952

Effect of Internal Strain on the Lifetime of Filled Insulation

Abdur Rashid and S.F. Shaukat

Department of Electrical Engineering, COMSATS Institute of Information Technology, Abbottabad, Pakistan

Abstract: In this research work the effect of internal strain on electrical tree growth has been revealed in clear polyester. Strain was introduced in the specimen by the introduction of particles like aluminium oxide, polytetroflouroethylene (PTFE) and glass beads in a clear polyester resin C. Aluminium oxide particles of size 105μm, PTFE 675μm and glass beads of 1mm were tested. These materials were employed in a clear polyester resin thus making a barrier. The batch of 20 annealed, un-annealed and oiled specimens of each material were tested. Using aluminium oxide, PTFE and glass beads made detailed observation of the interaction between advancing tree channels and the particles. The clear interaction of tree channel between dense barrier of aluminium oxide and PTFE was impossible but glass beads being transparent in nature allowing progress of the tree through barrier to be carefully studied. Strain were removed or relaxed by annealing the specimens and work of adhesion reduced by oiling the specimens.

Key words: Electrical treeing . strain . transmission and distribution . resin

INTRODUCTION

Insulation plays an important role in electrical power transmission and distribution network. Intensive work has done to improve insulating materials and also the size of insulator. Practical resin based insulation is nearly always composite in kind. Filler are added in the form of particles, plastic fabric tapes and fibres partly to enhance mechanical strength and partially inhibit tree growth. Typical additives are mica, glass and wollastonite (calcium silicate)

The influence of mechanical forces on the degradation of electrical insulation has been known for many years. From the work of Billing and Grove through Arbab and Auckland the effect of bending stresses on tree growth in polymeric insulation has been clearly demonstrated. The effect of internal strain, by photo electric technique, on tree growth also reported by Champion and David [1-6]. One of the most interesting illustrations of the mechanical aspect of electrical trees occurs in the presence of internal barrier. The manufacturer process, which involves the laying down of one layer of resin and the addition of the barrier material and sequent second layer, generates mechanical stress in the barrier region.

It is of interest to note that physical presence of an internal barrier is not only itself essential to produce the above effect, sample without an internal barrier, but produce by casting two halves, shows a six-fold increase in treeing resistance, compared with sample with the same spacing but cost in a single operation.

Likewise, it is predicated that the strain surrounding particles embedded in resin will effect the growth of tree channels in their vicinity. It is expected that the degree and extent of the strain will be dependent upon the size of the particle and influence of strain introduced by the presence of the particles. In this paper we will investigate the validity of the predication by measuring the life of the un-annealed, annealed and oiled specimens [7, 8].

MATERIALS AND MATERIALS

The materials used in this investigation were thermosetting polyester resin as matrix and Aluminium oxide particles of size of 105μm, PTFE 675μm thick and glass beads of 1mm size were tested. The resin was supplied by Scott Bader and is known as clear casting resin C. This resin was chosen because of its ease of handling, rapid curing, good physical and electrical properties, dimensional stability and optical quality. Aluminum oxide, glass beads and PTFE were employed as filler because of their physical properties. These are summarized in Table 1.

$$y_2 = 41mj - m^{-2}$$

Specimen manufacture: The specimen were made from resin containing 1% hardener by volume with a thin layer of aluminum oxide particles lying between point and plane electrodes. Hypodermic needles were used as point electrode because they are sharp enough

Corresponding Author: Dr. Abdur Rashid, Department of Electrical Engineering, COMSATS Institute of Information Technology, Abbottabad, Pakistan

Table 1: Materials and their corresponding properties

Materials	Surface energy γ_1 mj-m^{-2}	Work of adhesion W_A mj-m^{-2}	Fracture toughness K_c KN-m$^{-3/2}$	Melting point T_c c^o
Al_2O_3	800.0	362.20	4500	2050
Glass	560.0	303.50	400	827
PTFE	11.1	42.67	850	327
Melinex (PET)	43.9	84.85	1800	255
Nylon	46.0	86.85	-	-

Matrix Polyester resin surface energy

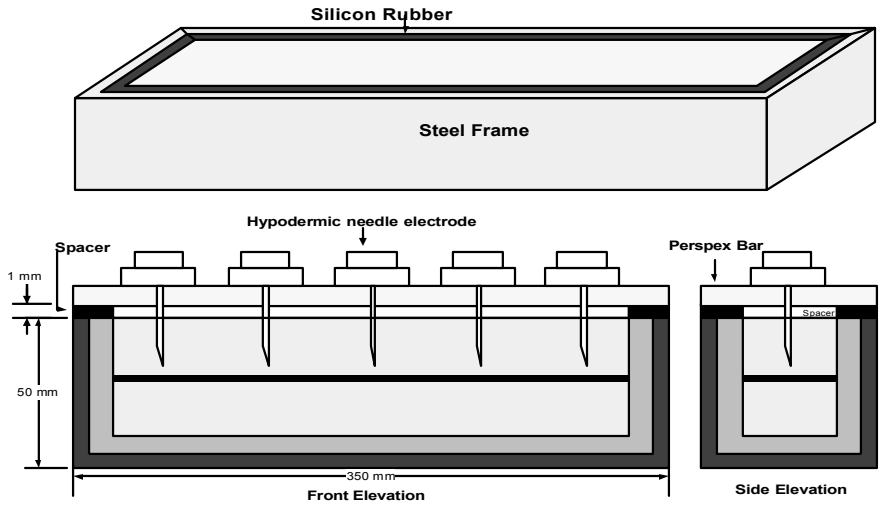

Fig. 1: Specimen manufacture method

to support tree growth, cheap reproducible and readily available.

The specimens were cast in strips in a silicone mould supported in a steel frame as shown in Fig. 1. The walls of the mould were lined on the inside with Melinex which ensured that the sides of the finished product had flat polished surfaces facilitating optical observation.

The specimens were made in two stages. First, a layer of resin approximately 4mm deep was poured into the bottom of the mould and allowed to set. A second layer of resin mixed with aluminum oxide particles of the required size was poured on top of the hardened surface. The particle to resin ratio was 5:100 by volume. The hypodermic point electrodes were then suspended in the mixture through holes in a Perspex bar placed on the metal frame used to hold the silicone rubber mould. With the bar in place, the needle tips were then fixed to the bar by a light covering of rubber adhesive and the bar raised from the frame using glass spacers to set a gap between needle tip and hard resin surface, of 1mm. The particles sank through the liquid resin to settle on the solid resin surface giving a thin homogeneous layer of aluminum oxide. As the resin gelled and hardened so the particles became encapsulated to form a particle barrier lying approximately 0.7mm beneath the pin tip.

The specimen bar so formed was removed from the mould and cured for a further three hours at 80 degree centigrade, after which it was removed from the oven and allowed to cool naturally to room temperature. The Perspex bar supporting the point electrode was carefully removed and the block cut to produce individual specimens. In each specimen a cavity was drilled opposite the needle tip, using a 10mm diameter spherical cutter, to a depth giving a separation of 2mm between the top of the sphere and the pin tip. The surface of the indentation wags covered with aluminum foil to form a plane electrode. A finished specimen is illustrated in Fig. 2.

On completion, each specimen was inspected by a microscope for defects. Faulty specimens were rejected Hypodermic needles were used as point electrode because they are sharp enough to support tree growth, cheep reproducible and readily available. High voltage 28kV A.C, 50Hz was applied in the form of burst through counter which count number of cycles applied to the specimen. Specimens were annealed by allowing

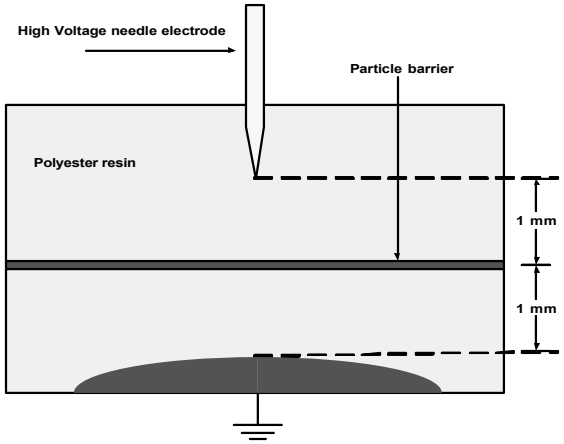

Fig. 2: Point plan specimen containing barrier

them to cool slowly in the curing oven. This took approximately 12 hours during which stain relaxed and in some case disappeared completely.

The effect on the life time of the strain associated with the particles on the lifetime was demonstrated by measuring the life time of specimen after annealing to reduce strain.

Strain is affected by the work of adhesion between matrix and filler, in this case polyester resin and aluminum oxide respectively. To demonstrate the effect of the work of adhesion W_A on the life time, tests were performed using specimens in which W_A was reduced by dipping the aluminum oxide particles in diesel oil for 24 hours. The particles were then taken from the oil and surplus oil removed by laying them in layers between paper tissues. The oiled particles were then mixed with resin and cast to form barriers in the usual way. Whilst the use of diesel oil reduced the work of adhesion between resin and particles, it is a chemical additive which alone could influence tree growth. To emphasize the influence of the work of adhesion, further tests were performed in which the barrier was made from chemically inert particles of PTFE which as indicated in Table 1 has very low work of adhesion with polyester resin. The particle size was 675µm. the specimens were made in the same way as those with aluminum oxide barriers, but without the use of oil. Detailed observation of the interactions between advancing tree channels and the particles was impossible in the dense barriers of aluminum oxide and PTFE. Thus to give some indication as to the nature of the interactions, between particles and trees the tests were performed using barriers of small glass beads.

Glass has a work of adhesion with polyester resin comparable to that of aluminum oxide, with the additional advantage that beads are transparent allowing progress of trees. The specimens were manufactured

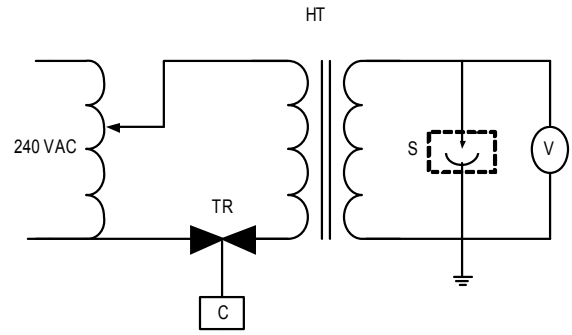

Fig. 3: Experimental arrangement

using the technique described as above with a little modification. Due to their high specific weight the glass beads did not mix with the resin, to produce an even suspension. Because of this the beads had to be introduced separately onto the surface of initial layer of solid resin being evenly distributed by hand. The needles were then put in place and rest of the mould filled in the usual way. After solidification, the specimen bar was removed from the mould and cured in the oven as described above. The inter electrode gap was selected as 3mm, the size of the beads making it impossible to obtain a 2mm separation as used in the case of aluminum oxide and PTFE barriers.

Polariscope: Strain and growth of trees within the specimens was observed using a Polariscope. It is a device which reveals different strain pattern within the materials, such as polyester, that exhibits the photo electric effect. The Polariscope used in this work was of the crossed circular type.

High voltage test equipment: The high voltage test equipment used is illustrated in Fig. 3. It consisted of a 240V/30kV, 1.5kVA, 50Hz single phase step up transformer supplied from a mains driven variable ratio transformer variac via a triac TR activated by a control unit. The auto transformer was used to control the magnitude of the voltage applied whilst the control unit regulated the number of cycles applied, in the range of 1 to 9999.

- H.T-High Tension Transformer
- S-Specimen
- C-Control
- TR-Triac

The control unit, which was purpose built by the authors, is basically a counter. A block diagram showing the major components is shown in Fig. 4

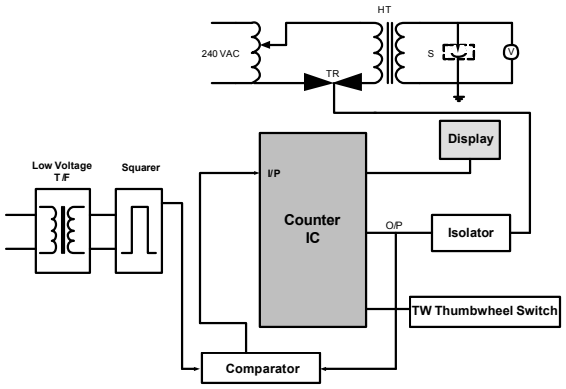

Fig. 4: Block diagram of control unit

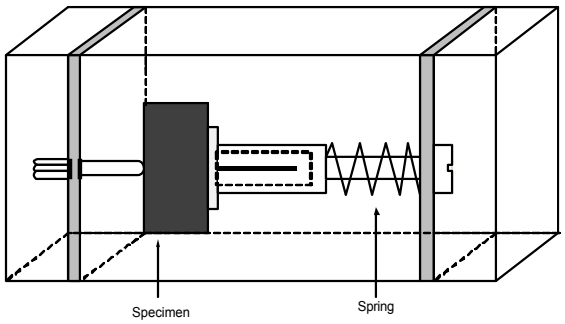

Fig. 5: Test cell

Experimental procedures: A group of 20 identical specimens were tested for each type of particles. Each specimen was clamped between brass electrodes in the test cell shown in Fig. 5. The cell was then filled with pentane to suppress extraneous discharges.

The test voltage was selected to be 28kV rms, because it produced intrinsic breakdown at the tip of the hypodermic needle leading to easily observed and repeatable tree growth in the dielectric. Voltage was applied in bursts, for a prescribed number of Cycles determined by the control unit until the specimen broke down.

Following each application of voltage, the inter-electrode gap was inspected in the Polariscope for tree growth. Photographs were taken at various stages of growth using a camera mounted on the Polariscope eye piece.

RESULTS AND DISCUSSION

The specimens, whatever the type, particle size and material used to make the barrier, were tested in batches of 20 to establish their life time in the presence of tree growth. The test procedure was same as described previously. Strain within the specimens and the progress of tree channels through the specimen were observed using the Polariscope.

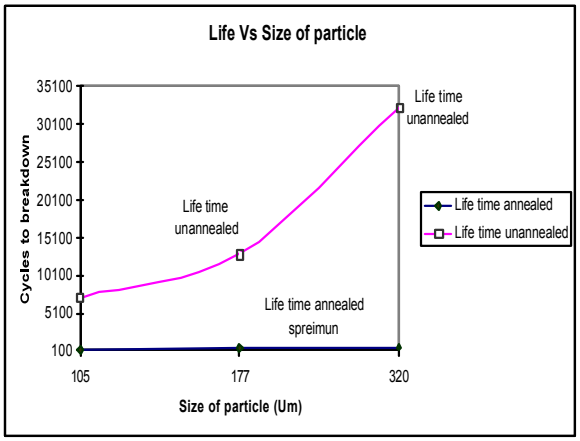

Fig. 6: Effect of annealing on the life time of the specimens

The effect of annealing on the life of specimens containing aluminum oxide barriers is clearly shown in Fig. 6. It is clear from the curve that mean life time of annealed specimens of particles equal to and greater than 177μm is seen to have been reduced to the levels of un-annealed specimens containing the smaller particles of 4.5 and 17μm (curve a)

This effect is illustrated by considering the life time of specimen containing barriers of particles size 177μm. In this case annealing reduced the life time of the specimens dramatically, by a factor of 26, to an average in term of cycles to breakdown, to a level comparable with the average for un-annealed specimens containing barriers with the smallest sized particles. Polariscope observation indicated that annealing reduced the strain to nearly zero as illustrated in Fig. 7a and 7b.

Reduction in work of adhesion associated with the aluminum oxide particles through oiling also reduced the life time of the specimens. The oiled specimens were nearly strain free, the effect of the oil being equivalent to annealing.

This is apparent by considering the performance of the 177μm barrier. In this un-annealed state the barriers had an average life time of 12,910 cycles which reduced to 825 cycles due to oiling.

The effect of work of adhesion was confirmed by the results obtained using PTFE particles with low work of adhesion ensured that the specimens were strain free as shown in Fig. 8. The average cycles to breakdown for PTFE barrier was less than for those containing un-annealed aluminum oxide barriers of comparable size. Thus the 20 specimens containing PTFE barriers gave a life time in term of the average number of cycles to breakdown of 1007 cycles. The specimens containing 320μm aluminum oxide particles, the largest size tested

Fig. 7a: Effect of annealing

Fig. 7b: Effect of annealing

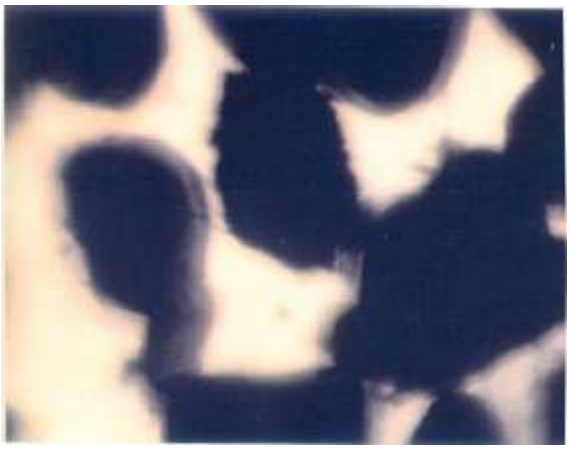

Fig. 8: Strain free P.T.F.E particles

had an average life time of 32282 cycles in the un-annealed state and 566 cycles in annealed state.

Detailed results giving the number of cycles to breakdown for each specimen for annealed aluminum oxide, oiled aluminum oxide and PTFE barriers are summarized in Table 2.

The glass beads introduced a high degree of strain, as is apparent from Fig. 9 which contains photographs of tree development in the presence of glass beads in un-annealed, annealed and oiled state. It also shows the strain in un-annealed, annealed and oiled glass beads specimens. Figure 9a shown the un-annealed glass beads, containing the highest degree of strain around the glass beads. Figure 9b and 9c show annealed glass

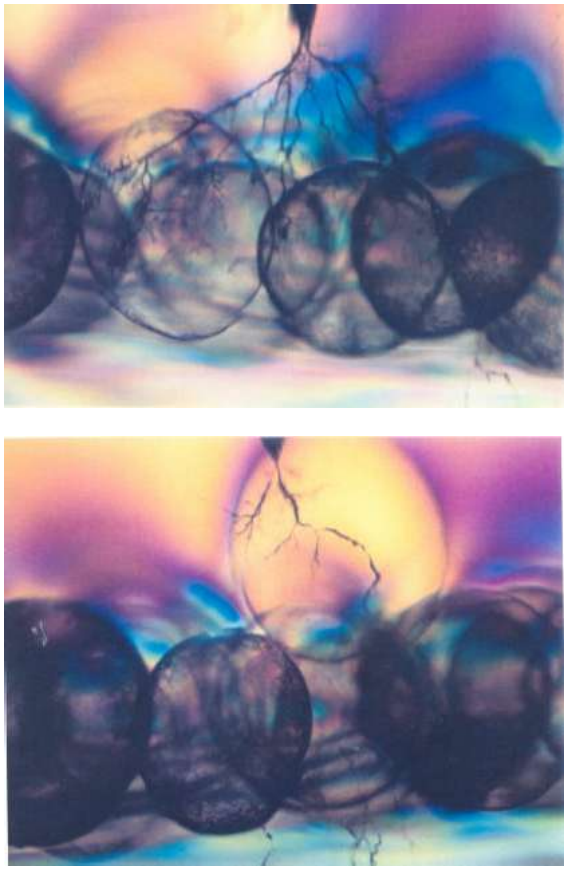

Fig. 9a: Treeing and strain in un-annealed glass beads specimen

and oiled glass specimens. Both photographs show reduced levels of strain compared with Fig. 9a.

When the strain was relieved by annealing, the life time reduced considerably as it did when the glass beads were oiled to reduce work of adhesion. The average life for the un-annealed glass was 29700 cycles, for the annealed 12576 cycles, whilst oiled glass beads gave a life time of 19150 cycles. The result for each specimen is summarized in Table 2.

The work described in the previous section reveals that the life of the specimens is dependent upon the size of the filler used in the barrier as already demonstrated. As the filler size increased so the lifetime of the specimen increased. This is apparent from curve (a) of Fig. 6. It was thought at the outset that small particles, due to close packing would give a higher life time, but the results demonstrate the opposite effect. In the case of smaller particles, tree initiation time was the same as in the case of bigger particles, but growth was much faster through the barrier. It was presumed that the difference was caused by different degrees of strain induced by the particles. Polariscopic observation show higher strain around the bigger particles and lower

Table 2

Barrier size treated	Average life time	Spread min-max	S.D.
Al_2O_3 105μm un-annealed	7129	1400-19000	6517
Al_2O_3 105μm annealed	228	90-560	124
Al_2O_3 177μm Un-annealed	12910	1150-29000	8999
Al_2O_3 177μm annealed	498	100-1400	388
Al_2O_3 177μm oiled	625	90-2000	595
Al_2O_3 320μm Un-annealed	32282	5400-66000	23403
Al_2O_3 320μm annealed	566	160-1200	315
Al_2O_3 320μm oiled	959	400-1520	400
PTFE 675μm Un-annealed	1007	100-1900	890
Glass beads 1mm un-annealed	29700	9000-54000	12321
Glass beads 1mm Annealed	12576	3000-27000	7839
Glass beads 1mm oiled	19150	3000-45000	9095

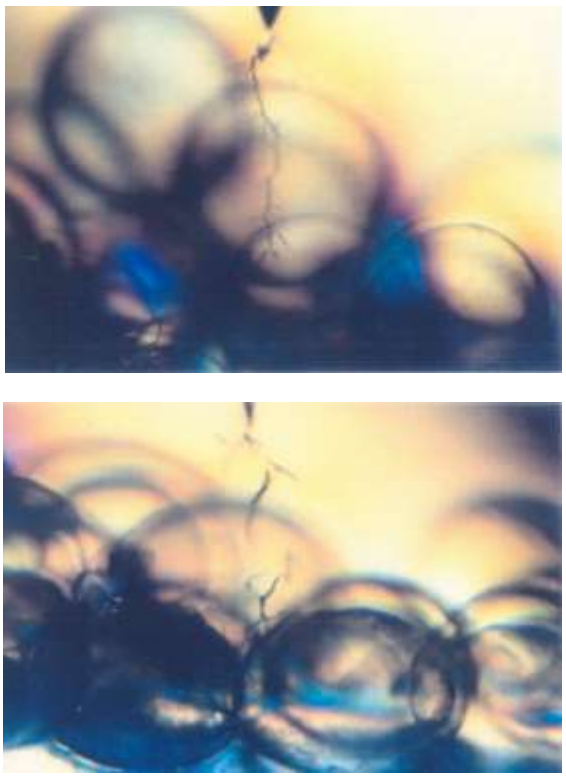

Fig. 9b: Treeing and strain in annealed glass beads specimen

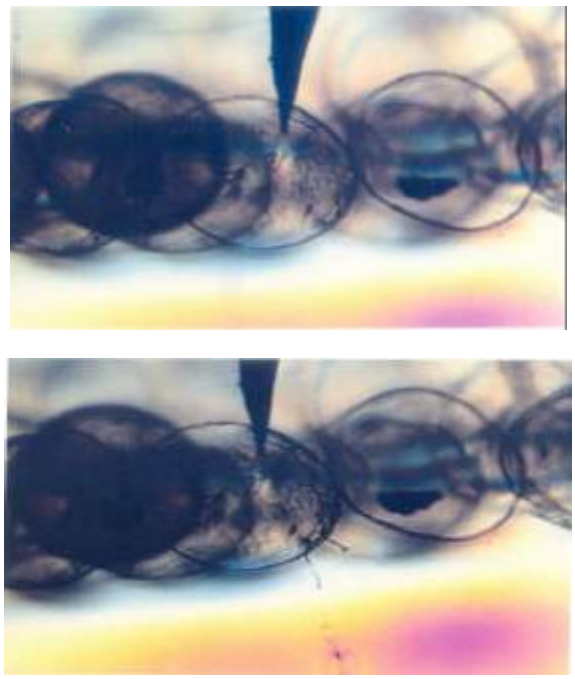

Fig. 9c: Treeing and strain in oiled glass beads specimen

strain around smaller particles confirming this supposition.

It has been shown that compressive strain retards tree growth whilst tensile strain accelerates it. The observed increase in lifetime is a sign of the presence of compression around the particles. In the case of small particles the compressive effect is less than for the larger particles. It is proposed that being smaller; each particle has relatively little influence on the solidification process, shrinkage associated with which being large compared with the particle size. In addition, there may well be a greater tendency for small particles to move in sympathy with resin contraction than is the case with larger particles. Lastly, the close proximity of the small particles may introduce an averaging effect between adjacent particles reducing the overall strain to minimum proportions.

The importance of strain was established when annealing reduced the life of those specimens containing larger particles to that of those specimen containing the smaller particles.

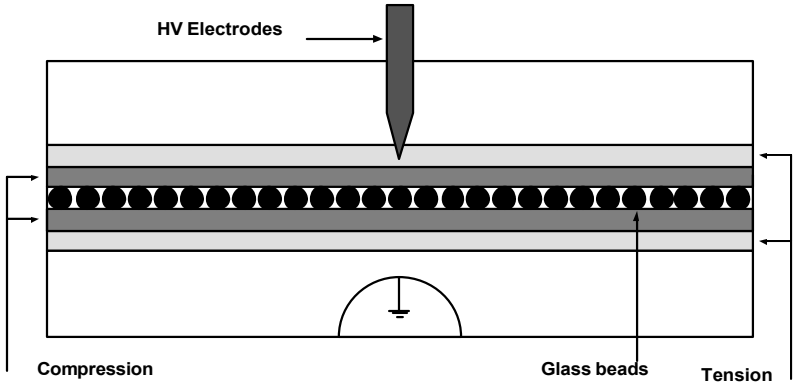

Fig. 10: Distribution of strain in glass beads barrier specimen

The strain introduced by the particle barriers was shown to be governed by the work of adhesion between particles and matrix. This is so since good adhesion gives a rigid structure unable to accommodate the strain changes brought about by resin shrinkage. Thus the oiled particles whatever their size produced strain free specimens having life times about the same as their annealed counterparts. The importance of adhesion was further demonstrated by the PTFE barrier which showed the same low life time indicating additionally, that, in the presence of the thin film of diesel oil on the surface the aluminum oxide particles did not appear to degrade the surrounding resin, at least in treeing terms.

The glass beads had the desired effect providing a means of observing in detail the interaction between a barrier particle and tree channel. The results using aluminum oxide particles indicated that the particles were surrounded by compressive strain. The way in which trees grow is such that as the particles are approached, channels tend to develop laterally, forward growth being inhibited by compression. The same effect was observed in the case of glass beads.

Specimens containing glass beads were highly strained. The nature and magnitude of the strain was difficult to establish although there is an instrument called a babienet compensator [7]), available for internal strain measurement. But due to the absence of a well defined principal axes, it could not be used. Therefore a qualitative assessment based on experimental observation had to be made. Thus it was concluded that the barrier of glass beads is surrounded by a belt of compression, which is complemented by tensile strain around the point electrode. This theoretical distribution of strain is shown in Fig. 10 which helps describe the shape of the trees and their pattern of growth.

In un-annealed specimens of the kind shown in Fig. 9a, growth of trees near the pin-tip was quite quick because of tensile strain shown in Fig. 10. Growth slows down as the tree approaches the barrier due to the compressive zone and splits into many branches as shown in Fig. 9a. Branch growth is stopped by the beads and tree channels became wider due to continuous discharge activity. Finally a tree channel eventually penetrates the barrier passing between the glass beads through what could possibly be a small zone of tensile strain. Breakdown of the specimen followed quickly.

The progress of a tree in the presence of glass beads in an un-annealed specimen is shown in Fig. 11, curve 1. This curve is a plot of the distance from the tip of the point electrode to that of the most distant channels plotted against the numbed of cycles applied. Similar curve were plotted for a number of specimens, the figures being obtained during the regular observation of tree growth during the test routine described in the previous section.

In the case of annealed growth of trees towards the barrier is relatively slow compared with un-annealed specimens. This is from the Fig. 11 curve 2 and is due to removal of tensile strain around the pin-tip. No halting of the trees occurred in or near barrier there being an absence of compressive strain and so the only resistance offered was by the glass beads. It follows that the; shape of the trees is also quite different being shown in Fig. 9b. This tree is typical having only one branch, unlike the tree in the un-annealed specimens with many branches.

In oiled specimens as in the annealed one there is little or no strain. Growth near the pin-tip is almost the same as for the annealed specimens. But as the tree impinges upon the beads, delamination at the non-adhered interface occurs. Tree growth is trapped by tracking around the glass in the weak mechanical interface between glass beads and resin. The effect of tree trapping on tree growth in the presence of oiled beads is shown in Fig. 11 curve 3.

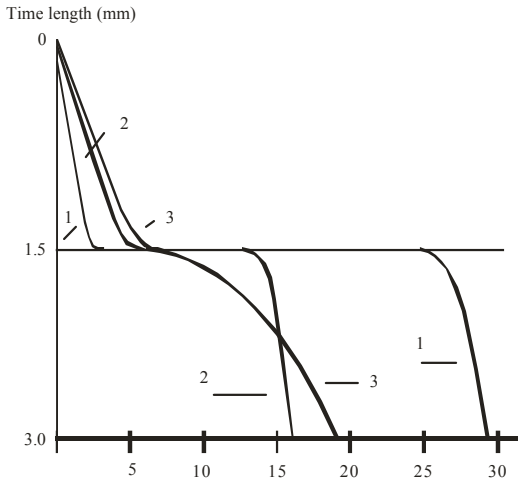

Fig. 11: Tree growth Vs cycles to breakdown

The trapping phenomenon is clearly illustrated in the photograph of Fig. 9c, where tree growth is seen to be confined over the surface of incident specimen before a single branch develops to bridge the specimen.

CONCLUSION

Growth of electrical trees is greatly affected by the internal strain introduced by the fillers. t has been derived from experimental results that the progress and growth of electrical tree greatly influenced by work of adhesion between filler and matrix, greater work of adhesion slower the propagation of trees and vice versa. It has been confirmed by testing the Aluminum oxide particles which has higher work of adhesion with resin. Work of adhesion has been reduced by oiling the filler and life time of the oiled specimens considerably reduced compared with un oiled specimens of the same size.

It was also concluded from the experimental results that internal strain developed also greatly effect on the life time of the insulation. Tensile strain developed nearby the electrode and compressive strain around the barrier. Higher compressive strain retards the growth of trees and improves the life time of the insulation while tensile strain accelerates the progress of trees.

REFERENCES

1. Auckland, D.W., B.R. Varlow and A. Rashid, 1992. The influence of particular barrier on treeing in polyester resin. 4th International Conf. on conduction and breakdown in solid Dielectric, Italy, pp: 22-254.
2. Zheng, X., G. Chen and A.E. Davies, 2001. The influence of survival mechanical stress and voltage frequency on electrical trees in XLPE. Annual conference on electrical insulation and Dielectric Phenomena.
3. Shaukat, S.F. *et al*., 2009. Sequential studies of beamformng algorithms for smart antenna systems. World Applied Sciences Journal, 6 (6): 754-758.
4. Auckland, D.W., B.R. Varlow and S.M. Kabir, 1992. Effect of barrier on tree growth in solid insulation. Proc. IEEE. 139: 14-20.
5. Syed Ayaz Ali Shah and S.F. Shaukat, 2009. Neural network solution for secure interactive voice response. World Applied Sciences Journal, 6 (9): 1264-1269.
6. David, E., J.-L. Parpal and J.-P. Crine, 1994. Influence of internal stress and strain on electrical treeing in XLPE. Conf. on Electrical Insulation and Dielectric Phenomena, pp: 575-581.
7. Kaska, A. and G. Roberson, 2008. Photoelectric stress analysis. John Willey and Sons Publication.
8. Shaukat, S.F. *et al*., 2009. Mobile phone location determination in urban and rural areas using enhanced observed time difference technique. World Applied Sciences Journal, 6 (7): 902-907.