World Applied Sciences Journal 28 (2): 205-211, 2013
ISSN 1818-4952

DOI: 10.5829/idosi.wasj.2013.28.02.1429

Experimental Study of a Combined Three Bucket H-Rotor with Savonius Wind Turbine

[1]S.M. Rassoulinejad-Mousavi, [1]M. Jamil and [2]M. Layeghi

[1]Department of Renewable Energy, Materials and Energy Research Center, Karaj, Iran
[2]Department of Wood and Paper Science and Technology, Faculty of Natural Resources, College of Agriculture and Natural Resources, University of Tehran, Karaj, Iran

Abstract: In this paper an experimental work is conducted to study the performance of a hybrid vertical axis wind turbine (HWT). A savonius wind turbine (WT) is combined with a three bucket H-rotor WT with DUW200 airfoils. Two sets of positions are examined for finding the best case for having the highest performance of the combined WT. The HWT has been tested in a subsonic wind tunnel in different values of wind velocity. Results show that, in the case that the two turbines (H-rotor and savonius) are combined, higher performance is obtained in compare with H-rotor. Among the two combinations the one that savonius is posed middle of the H-rotor, higher power coefficient is obtained in compare with that of the savonius is below the H-rotor. However, the second position produces more electrical power.

Key words: Combined Vertical axis wind turbines · H-rotor · Savonius rotor · Experimental Study · Wind tunnel

INTRODUCTION

Wind energy is the most popular renewable energy resource thanks to its elastic cost compared with conventional fossil resources [1-3]. In line with advancing the usage of this energy source researchers are developing the wind turbine technology all over the world. Hence it is too important to study on improvement rotor models with high rotation rates and power coefficients. This study aimed at manufacturing highly efficient wind turbine rotor models by combining two different kinds of vertical axis wind turbines namely H-rotor and savonius.

Darrieus H-Rotor Wind Turbine: Engineers succeeded in developing vertical-axis designs, which could also effectively utilize aerodynamic lift. The design proposed in 1925 by the French engineer Darrieus, in particular, has been considered as a promising concept for modern wind turbines. The specific advantages of vertical axis wind turbine (VAWT) concepts are that their basically simple design includes the possibility of housing mechanical and electrical components, gearbox and generator at ground level and that there is no yaw system. This is countered by disadvantages such as low tip-speed ratio, inability to self-start and not being able to control power output or speed by pitching the rotor blades. A variation of the Darrieus rotor is the so-called H-rotor (Fig. 1). Attempts were made particularly in the UK, in the US and in Germany to develop this design to commercial maturity. So, Instead of curved rotor blades, straight blades connected to the rotor shaft by struts are used. H-rotors of a particularly simple structure, with the permanently excited generator integrated directly into the rotor structure without intermediary gear-box, were developed by a German manufacturer up until the beginning of the nineties [4-7]. The H-rotor wind turbine has low starting torque but it can provide reasonably good efficiency at high rotational speed [8]. That is why Darrieus wind rotor is never used alone; rather it can be used in conjunction with a wind rotor, which can provide a high starting torque like Savonius rotor.

Corresponding Author: S.M. Rassoulinejad-Mousavi, Department of Renewable Energy, Materials and Energy Research Center, Karaj, Iran.

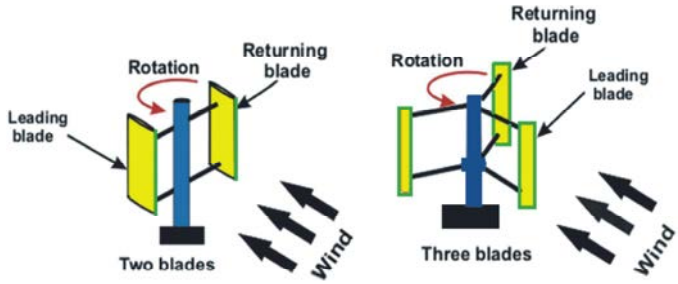

Fig. 1: Schematic of H-rotor wind turbine

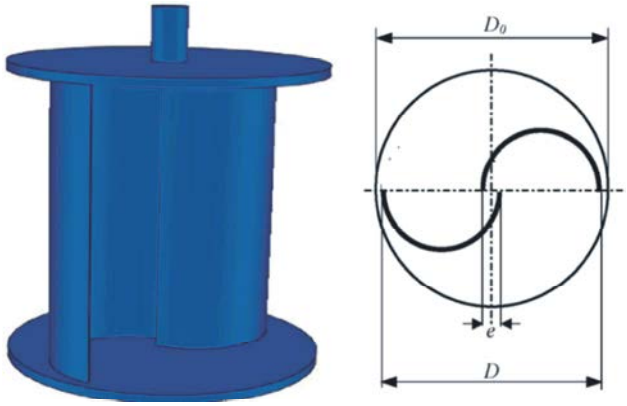

Fig. 2: A Savonius rotor and its geometric parameters

Savonius Rotor: High starting torque, great self-starting ability and integration with building architecture are some of the main advantages of drag-type vertical axis wind turbines like Savonius rotor, however they attract less attention comparing with lift turbines due to their lower power coefficient and aerodynamics efficiency. Since erratic wind flow patterns are quite common in urban areas, the ability of vertical axis wind turbines (VAWTs) to work effectively in highly turbulent and unstable wind flow patterns makes them proper choices for small scale applications. Besides, these turbines are preferred by architects in aesthetic concerns and produce less noise in compare with horizontal axis wind turbines (HAWTs) [9].

Savonius wind rotor is a drag-type vertical axis wind turbine invented by a Finnish engineer, Sigurd Savonius, in 1925 [10]. The idea behind the Savonius rotor is based on cutting a cylinder into two halves and putting them sideways along the cutting plane (Fig. 2). Although, these rotors have shown lower efficiency than the other modern vertical and horizontal axis wind rotors, they still have some benefits as follows: a) their design is simple and cheap; b) they begin to run on their own and they have a high starting torque and low cut-in wind speed. This is the reason that they have been the subject of the large number of investigations by considering the effects of design parameters. For instances, Irabu and Roy [11] conducted an experiment by placement of a Savonius rotor inside a guide-box to concentrate the incident flow. Further significant successes were reported using other types of solid obstacles in Altan and Atilgan design [12] and Mohamed et al. research [13]. The first one modification leads to 27% improvement of design point only for standard and cylindrical blade, while the latter found more that 40% improvement for small operating range (λ<1). A series of experiments by Kamoji *et al*. [14] evaluated the effect of a Savonius rotor blade shape and gained improvement of the static torque. Hayashi et.al. [15] based on a wind tunnel test concluded that wind speed is an important parameter in their design and there are some problems for large values of λ. Saha *et al*. [16] conducted wind tunnel tests of single, two and three-stage Savonius rotors in which basic and twisted blades were both tested. Also there are many works that obtained the velocity field around rotor using particle image velocimetry (PIV) which can be found in [17-20].

In this paper a savonius rotor according to its high starting torque is combined with an H-rotor in order to increase the self starting and performance coefficient of the wind turbine.

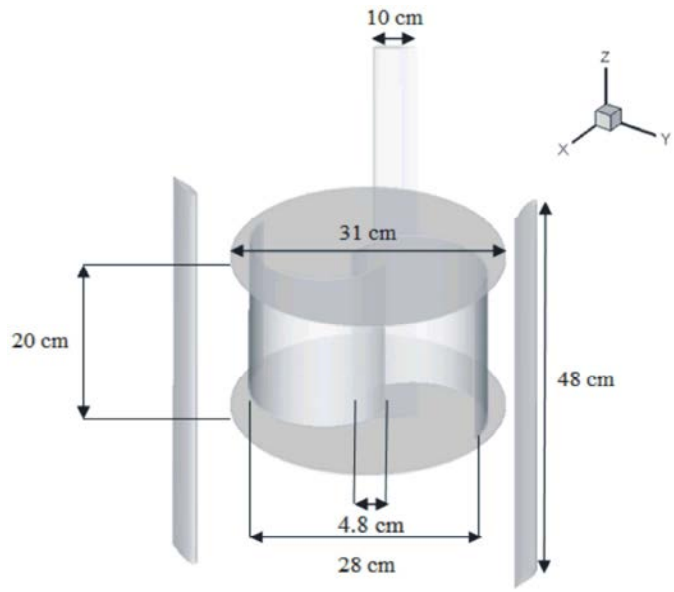

Fig. 3a: Combined WT with the savonius middle of the H-rotor

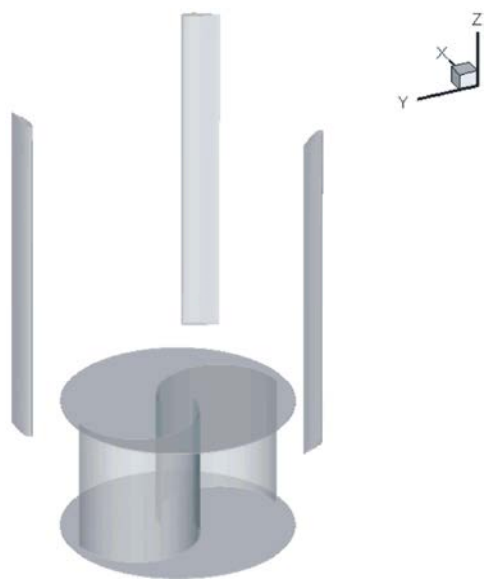

Fig. 3b: Combined WT with the savonius rotor below the H-rotor

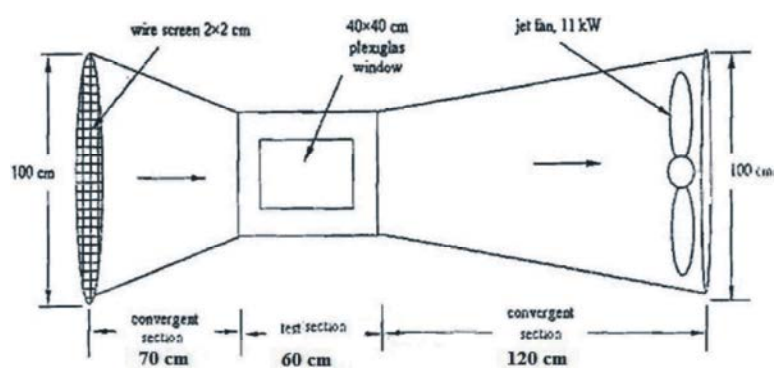

Fig. 4: Schematic of the subsonic wind tunnel which is used

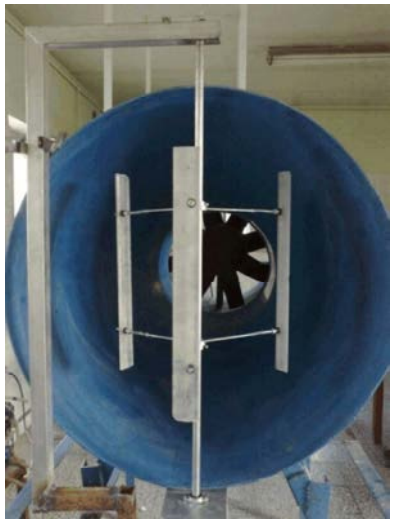

Fig. 5: H-rotor in wind tunnel for test

Fig. 6: Hybrid WT, savonius middle of H-rotor in wind tunnel for test

Fig. 7: Hybrid WT, H-rotor top of savonius in wind tunnel for test

Experimental Set up: Hybrid WT consists of a savonius rotor with 20cm height, diameter of 28 cm, overlap ratio of 0.16 and diameter of 31cm of end plates with an h-rotor WT with height of 48cm, chord of 10 cm and radius of 24cm, are shown in two different designs in Fig. 3(a, b). In the first design, the savonius rotor is put middle of the H-rotor (Fig. 3a) and in the second one the savonius is below of the H-rotor (Fig. 3b).

The combined turbine for test is installed in a subsonic wind tunnel which is shown in Fig. 4. The turbine shaft is coupled with a DC-motor KORMAS 250 watt and the output power is obtained by turning the motor. Experiments are conducted in five different wind velocities and the output power is obtained when the wind condition and turbine rotational speed is steady state. The wind velocity is measured using a digital anemometer. The output Electrical power is measured by a Lutron DW-6060 watt meter with accuracy of 1%.

The status of the turbines in the wind tunnel is shown in Figs. 5-7 for H-rotor and the two combinations of turbines.

The wind tunnel speed has been changed by changing the frequency of its inverter and in each wind speed, the output power is measured by reading the wattmeter. Then the power coefficient of wind turbine is calculated by the following formula:

$$C_p = \frac{P}{\frac{1}{2}\rho A V^3 \eta_m} \quad (1)$$

where in the Eq. 1, C_p is the power coefficient, P is output electrical power (Watt), A is the swept area (m^2), V is the wind velocity (m/s) and η_m is the efficiency of the DC-motor which is 95% for the mentioned motor.

RESULTS

For checking the robustness of the experimental results, the uncertainty of experimental results may be originated from measuring errors of parameters such as wind speed and electrical power. Using a method described by Taylor and Kuyatt [21] the maximum uncertainties of effectiveness, inlet air velocity and output powers, are estimated to be ±4.8%, ±3% and ±4.1% respectively. However for more trustiness to experimental data each h test is repeated three times. The repeats for each wind turbine are illustrated in Figs. 8-10. As seen there is negligible difference between results for each WT.

The comparative study between the output powers of each WT is shown in Fig. 11. As seen the hybrid turbine start their power generation sooner than H-rotor. It is clear from the figure that, in the position that savonius is below the H-rotor, higher amounts of power are generated. As expected the combination of H-rotor with savonius rotor increased the self starting ability of the H-rotor and the combined turbine start power generation sooner than H-rotor.

Power coefficient of the three types of turbines is plotted in Fig. 12. As seen the combined turbine with savonius middle of H-rotor position has the highest

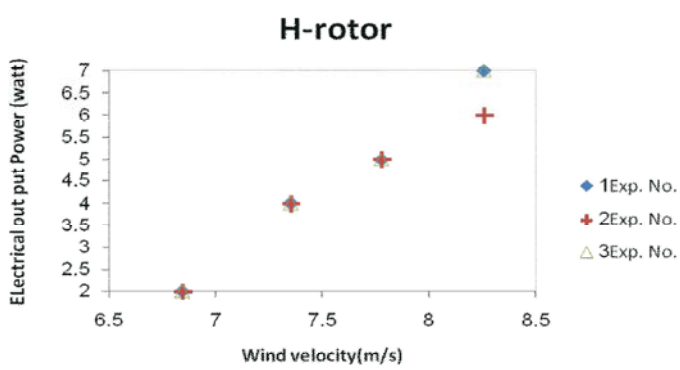

Fig. 8: Repeat of experiments for H-rotor WT

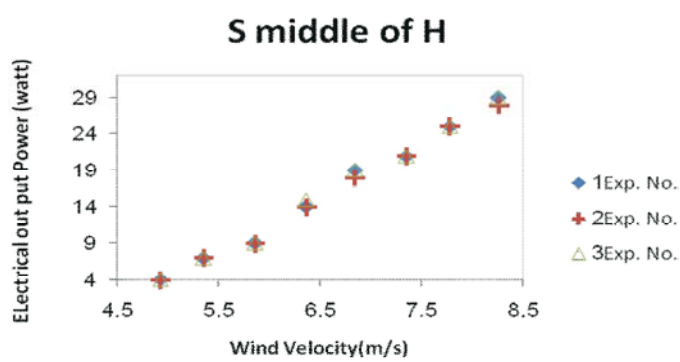

Fig. 9: Repeat of experiments for savonius middle of H-rotor

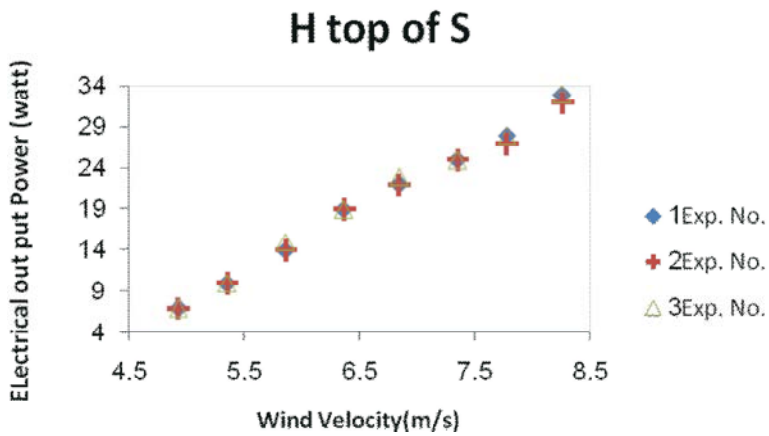

Fig. 10: Repeat of experiments for H-rotor top of savonius

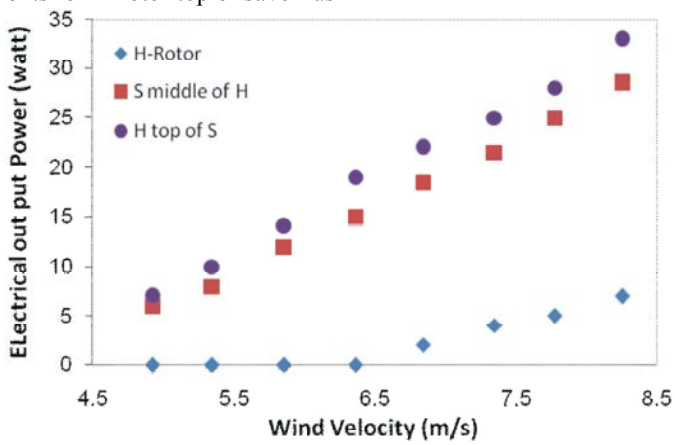

Fig. 11: Output powers of each WT at different wind velocity

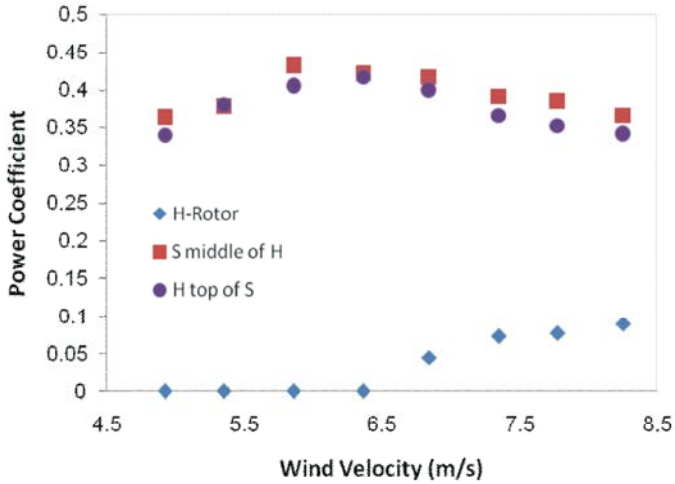

Fig. 12: Power coefficient of each WT at different wind velocity

power coefficient in compare with the others. The difference between the two models of the combined turbine is smaller in wind speeds of less than 6.5m/s and it increases by increasing the velocity to 8.5 m/s. the main reason for this increase is adding the drag force besides the lift and positive effect of vortex flows in empty spaces of H-rotor and converging the wind direction with rotor.

CONCLUSION

Experimental study on aerodynamic performance of combined vertical axis wind turbines which is posed in two different situations is conducted in wind tunnel. In the first model savonius rotor is middle of H-rotor and in the second one H-rotor is top of savonius. Results show that combining both savonius and H-rotor with each other makes an efficient wind turbine which has better self-starting ability besides higher power coefficient. It is worth noting that between the two combined models the first one yields higher power coefficient and the second one produces more output power. Hence according the kind of usage one of the two models can be selected.

REFERENCES

1. AWEA, 2001. Wind energy applications guide. USA: American Wind Energy Association.
2. Fairley, P., 2002. Wind power for pennies. Technol Rev., pp: 40-5.
3. Rodman, L.C. and R.K. Meentemeyer, 2006. A geographic analysis of wind turbine placement in North California. Energy Policy, 34: 2137-49.
4. Paraschivoiu, I., 2002. Wind turbine design: with emphasis on Darrieus concept. Canada: Presses Internationales Polytechnique.
5. Kaltschmitt, M., W. Streicher and A. Wiese, 2007. Renewable energy, technology and environment economics. Berlin, Heidelberg: Springer-Verlag.
6. Antheaume, S., T. Maitre and J. Achard, 2008. Hydraulic Darrieus turbines effciency for free fluid flow conditions versus power farms conditions. Renewable Energy, 33(10): 2186e98.
7. Hwang, I.S., Y.H. Lee and S.J. Kim, 2009. Optimization of cycloidal water turbine and the performance improvement by individual blade control. Applied Energy, 86(9): 1532e40.
8. Shankar, P.N., 1979. Development of vertical axis wind turbine. Proc Indian Acad Sci., C2(1): 49-66.
9. Mertens, S., 2003. Performance of a high tip speed ratio H-Darrieus in the skewed flow on a roof, Published by the American Institute of Aeronautics and Astronautics, Inc.
10. Ushiyama, I. and H. Nagai, 1988. Optimum design configurations and performance of Savonius rotors, Wind Engineering, 12(1): 59-75.
11. Irabu, K. and J. Roy, 2007. Characteristics of wind power on Savonius rotor using a guidebox tunnel, Experimental Thermal and Fluid Science, 32: 580-586.
12. Altan, B. and M. Atılgan, 2008. An experimental and numerical study on the improvement of the performance of Savonius wind rotor, Energy Conversion and Management, 49: 3425-3432.
13. Mohamed, M.H., G. Janiga, E. Pap and D. Thévenin, 2011. Optimal blade shape of a modified Savonius turbine using an obstacle shielding the returning blade, Energy Conversion and Management, 52: 236-242.
14. Kamoji, M., S. Kedare and S. Prabhu, 2009. Experimental investigations on single stage modified Savonius rotor, Applied Energy, 86: 1064-1073.
15. Hayashi, T., Y. Li and Y. Hara, 2005. Wind tunnel tests on a different phase three-stage Savonius rotor. JSME Int J., Ser B: Fluids Therm Eng., 48(1): 9-16.
16. Saha, U., S. Thotla and D. Maity, 2008. Optimum design configuration of Savonius rotor through wind tunnel experiments, Journal of Wind Engineering and Industrial Aerodynamics, 96: 1359-1375.
17. Fujisawa, N., 1996. Velocity measurements and numerical calculations of flow fields in and around Savonius rotors, J. Wind. Eng. and Ind. Aero., 59(1): 39-50.
18. Shigetomi, A., Y. Murai, Y. Tasaka and Y. Takeda, 211. Interactive flow field around two Savonius turbines, Renewable Energy, 36(2): 536-545.
19. McWilliam, M. and D.A. Johnson, 2008. Velocity Measurement of Flow around Model Vertical Axis Wind Turbines, International Journal of Green Energy, 5: 55-68.
20. Dobrev, I. and F. Massouh, 2011. CFD and PIV investigation of unsteady flow through Savonius wind turbine, Energy Procedia, 6: 711-720.
21. Taylor, B.N. and C.E. Kuyatt, 1994. Guidelines for evaluating and expressing the uncertainty of NIST measurement results. Nat. Inst. Stand Technol. Tech. Note, 1297.