Middle-East Journal of Scientific Research 25 (1): 49-55, 2017
ISSN 1990-9233

DOI: 10.5829/idosi.mejsr.2017.49.55

Renewable Power Centred Intelligent Power Supervision System for Households

[1]K.P. Sherin, [2]V. Shijoh and [2]T. Jarin

[1]Department of Power Electronics, Jyothi Engineering College, Kerala, India
[2]Department of EEE, Jyothi Engineering College, Thrissur, Kerala, India

Abstract: The foremost problem correlated with Indian power grid system is disproportion of consumption of energy and power generation. The problem faced in this modern era is load shedding and power drop.Cuts lead to discomfort to the consumers. The proposed system comforts the consumers for an optimal use of energy. The system is installed in every homestead and with the help of photovoltaic system solar energy is stored for future use. The system analyses the user data utilization using smart meter. From the analysed data the system will foretell the userbehaviour at that time and maintain battery power for use at the time of peak hours so that this will reduce the utilization from grid during peak hour. The system also maintains back power and uses it during power failure and will prioritize the devices for the utilization of stored power.

Key words: Renewable power · Smart meter · Powergrid · Battery management system · User consumption data

INTRODUCTION

Matching of supply and consumption of power is the central challenges faced by Indian power grid system. Traditional approaches of building enough generation and transmission capacity to meet peak load has resulted in substantial infrastructure that is idle for all but a few hours of a year.

In India, traditional method of power supply is following. But this method is fulfilling only the basic small local needs. The unbalancing of power generation and demands requires rethinking of traditional method in order to compensate for growth in power demands of India's power supply. Uses of electromechanical relays are not an effective method to find out line faults at distribution side. Detection of line faults is presently a time and man power consuming process.

Up to 2013 January 211.766 GW of electricity has been installed. Out of this 11.45% contributed by renewable power plant and rest is by non renewable power plant. This lack of instalment on renewable power leads to India to depend on foreigners for energy. And about 300 million Indians have no access to electricity as of December 2011. Many of rural areas of India are not electrified yet and already electrified areas are facing the lack of sufficient power. In 2012 power blackout put northern states in dark about 3 days [1][2]. Villages andcities may isolated from grid during situations like natural disasters, heavy cyclones etc. Problems in generating station also lead to power failure and isolation of places. So on integrating renewable energy to grid at distribution level or in each house we can meet the lack of power their by eliminate black outs up to a level Government agencies like KELTRON, ANERT are helping people to install the power generators at consumer side. But the main problem is that the proper use of generated power. So energy management technique is very essential and a system which will dynamically choose either power from grid or from renewable source. According to its availability. And the system automatically control the usage of power from according to the priority of devices which is set either by user or based on consumption and availability of power[3].

A non renewable energy resource comes from coal, oil etc. These will create pollutions and leads to global warming and also once the source of non-renewable energy gone out that can't be reproduce. Renewable energies such as wind, solar etc. will not produce any pollution. But the main problem is that the difficulty to integrate with the grid which leads to voltage level fluctuations, change in frequency, harmonics etc.[4]

Several studies and works has been done in the area of renewable energy integration with the grid and the energy management. This section describes some of the major works in this area. Real time pricing –based power scheduling scheme as demand response for residential

Corresponding Author: K.P. Sherin, Department of Power Electronics, Jyothi Engineering College, Kerala, India.

power usage is a scheme includes an energy management controller and a service provider. The provider sets the real time prices according to the current power usage profiles of the appliances.The energy management controller (emc) uses the electricity prices and user preferences to modify power usage across a home or a building.A sequential equilibrium is attained through a two way information exchange enabled through smart metering network. The emc aims to minimize the cost to the consumer for an appliance usage. Time is divided into slots for scheduling updates.This scheme can reduce peak load and the mismatch between actual load and planned supply, while avoiding a rebound peak.[5]

An intelligent HEM algorithm for managing high energy consumption household appliances with simulation for demand response analysis is proposed. The algorithm manages household loads consumption below the preset value.

The HEM system will monitor and manage the home appliances and providing load shifting and shedding according to a predefined set of requirements.The HEM receives external signals which includes demand curtailment request and duration of its algorithm is designed to guarantee the total household power consumption below the specified demand limit. The home owner can set their load priority and comfort preferences. A simulation tool is developed in C++ that consists of the proposed algorithm[6-8]

FEDRP is integrated for managing the loads intelligently by using the platform of smart grids for residential network. It provides detailed modelling and analysis of respective demands of residential consumers. In a RAN there is energy manager called REM which communicates with HEM through smart meters. During peak hours backup plants are used to accommodate peak loads which incur extra cost to the consumer. The consumer is provided same price up to a particular load above which energy is priced more. Also incentives where offered end users for cutting down their loads during peak hours. Utility revenue and profit is modelled for different levels of consumption.[9-11].

Demand Response program encourage end-use customers to alter their power consumption in response to incentives or real time electricity prices so that demand may be reduced. They present a Yupik, a system that helps the users respond to real-time electricity prices while being sensitive to their context and lifestyle. Real time prices are generally published by utilities in advance or can predict for the next couple of days as in. Yupik is essentially a planner that uses variable hourly prices and computes optimal appliance usage schedules for the next planning horizon. The generated schedule can then be used either by households to plan their usage or by the automatic load control systems for scheduling appliances.[12-15]

The proposed system which helps to optimal use of power from renewable energy source. The system is installed in each house and with the help of a photo voltaic system which generates power from solar energy and stores for future use. Then the system collect user consumption details using smart meter and do the data analysis for getting the user behaviour. from this analysis system will predict the user consumption behaviour and use battery power during peak load times, so that dependency from the grid can be reduced. The system will also keep sufficient back power for using at the time of power failure and will prioritize the devices for the consumption of stored power.

System Architecture: The main objective of this work is to build a system that is efficient for use of renewable power and it can be minimize the dependency of power from grid and provide continuous operation to certain devices during power failure. The system mainly consists of relays, microcontroller unit (MCU). Grid power and battery power stored from renewable source are given to the control devices which will intelligently perform the distribution of power. The control device connects the smart meter and the distribution board for intelligent power distribution. The loads in each houses are classified into heavy load, low load and critical load on the basis of wattage rating of each device. This is done for the proper energy management.

At the initial stage the stored power will be intelligently distributed based on the decision and prioritization algorithms stored in the system. In the later stage with the help of the collected consumption details and various system will dynamically set the priority for device to use the renewable power to ensure the continuity of service and the use of the stored renewable power at proper time to use them efficiently and thus to reduce the dependency of power from grid. We assume that the system will get the user consumption detail from the smart meter installed in the house. In this system, the smart system (control device) will choose the power source for the usage of loads based on the data analysis. For example, the system analyses by establishing the consumption of the critical, heavy and low loads and which available power sources (e.g.: renewable resources or grid power) each load is dependent on. From this analysis, the system can predict the usage of loads and the risk of lack of power in the storage device or the extra energy required during peak hours. To reduce the dependency of power from grid, consumption is

regulated. This is achieved by analysing which type (critical, heavy and low) of load uses the most power in each house. If a home‘s consumption is increasing the system will decide to depend on their available quota of renewable resources than the grid power. For example, there may be medical devices needing an energy supply 24/7 (thus deemed as a critical load), these high priority devices will consume more power and require continuity of service. Therefore when energy is scarce (i.e.: at the time of power failure or when total consumption is increasing), the system will automatically give priority to medical devices by designating most of the renewable power to critical loads. Thus prioritization is achieved automatically based on the data analysis.

Block Diagram and Circuit Description.

Block Diagram: The basic system model includes a microcontroller unit, an RF module, pc, current sensors and relay driver. The current sensors sense the currents of each load and also the current in both the ac mains and the battery source and transfers the data to microcontroller unit. The pc stores and analyses user consumption details such as average power consumption of each unit of loads. This data is transmitted to the microcontroller unit through the RF data modem. Depending on the data the microcontroller generates suitable signals to the relay driver so that the relay of each unit of loads is switched either to ac mains or to the battery power.

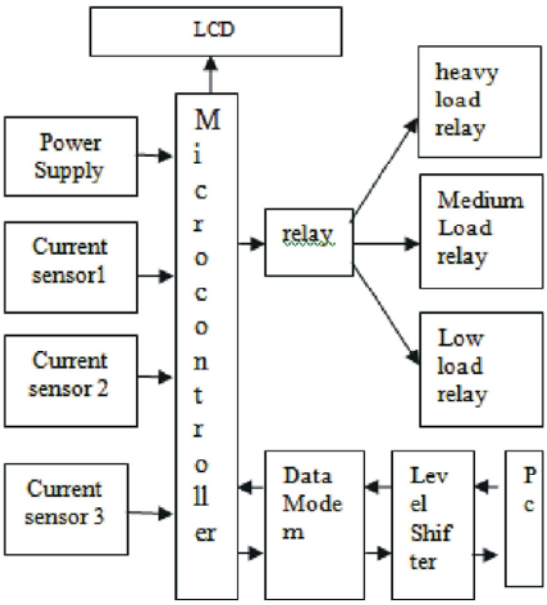

Fig. 1: Block diagram of intelligent power management system

Circuit Description: The basic circuit of the microcontroller consist of a power supply unit, External Crystal oscillator and a reset circuitry. The power supply consist of a voltage regulator which is used to regulate the voltage to a fixed voltage of 5v.Normally 7805 voltage regulators are used for this purpose. The A C voltage is step downed using a transformer and a bridge rectifier is used to convert AC to DC this rectified DC is passed through a capacitor filter and fed to the voltage regulator. Normally the crystal oscillator provided with the microcontrollers is of 16MHz and to 22pf capacitors are used with the microcontroller as decoupling capacitors for decreasing the noise. The reset circuitry used here consist of a switch and a resistor normally a HIGH signal is present in the mCLR pin of the microcontroller when the switch is pressed a LOW presents at the pin and microcontroller gets reset and as there is a resistor provided in circuit the Vcc and Ground never get direct short while resetting. The microcontroller consists of an internal ADC module this ADC module is used to convert the ADC reading from the sensor to a digital value. The ADC provided with microcontroller is of 10 bit resolution. This reads value from 0- 1023.The Devices which output the analogue variation can communicate with controller using this module.

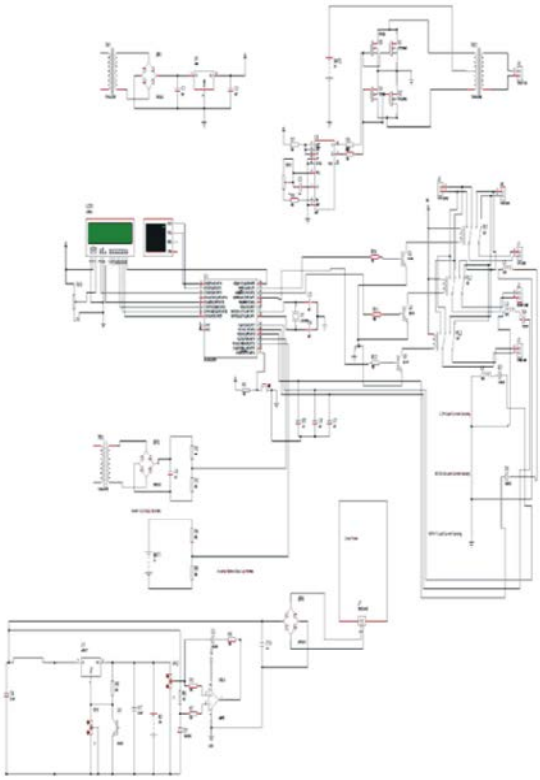

Fig. 2: Circuit diagram of intelligent power management system

The current transformers are coupled with a bridge rectifier and a filter this output is sampled using a voltage divider is connected to the analogue input pin of the microcontroller. The voltage is also measured using the same circuit as the current sensing circuit; instead of current this circuit uses a step down transformer for getting the sample voltage from mains.

The inverter circuit consists of CD4047. It is a multi vibrator with very low power consumption designed by TEXAS INSTRUMENTS. It can operate in monostable multivibrator and also astable multivibrator. In the astable multivibrator mode it can operate in free running or gatable modes and also provides good astable frequency stability. It can generate 50% duty cycle which will create a pulse, which can be applied for inverter circuit. This is mainly used in frequency discriminators, timing circuits frequency divisions etc. IRFZ44 is a N-channel enhanced mode silicon gate field effect transistor (MOSFET).they are mainly used in switching regulators, switching converters relay drivers etc. the reason for using them in the inverter circuit is the because it is a high switching transistor, can work in very low gate drive power and have high input impedance.IC CD4047 will work in the astable multivibrator mode. To work it in astable multivibrator mode we need an external capacitor which should be connected between the pin1 and pin3. Pin2 is connected by the resistor and a variable resistor to change the change the output frequency of the IC. Remaining pins are grounded.The pins 10 and 11 are connected to the gate of the MOSFETs IRFZ44. The pin 10 and 11 are Q and ~Q from these pins the output frequencies is generated with 50% duty cycle. The output frequency is connected to the MOSFETs through resistor which will help to prevent to the loading of the MOSFETs. The main AC current is generated by the two MOSFETs which will act as a two electronic switches. The battery current is made to flow upper half or positive half of the primary coil of transformer through Q1 this is done when the pin 10 becomes high and lower half or negative half is done by opposite current flow through the primary coil of transformer, this is done when pin 11 is high. By switching the two MOSFETs current is generated. This AC is given to the step up transformer of the secondary coil from this coil only we will get the increased AC voltage, this AC voltage is so high; from step up transformer we will get the max voltage.

The LCD is an external module used to display the details to the user. The LCD communicates with the microcontroller using parallel communication of the data. The data lines are connected to a port of the microcontroller and the control lines RS (register select), E (enable), R/W (read /write), are connected to the corresponding pins.

The Solar charger consist of a rectifier and a voltage regulator LM 317 the lm 317 is a variable voltage regulator the output voltage is set by using a voltage divider circuit in adj pin of the voltage regulator. The lm 358 op amp based cut off circuit is included with charger for overvoltage cut off.

Hardware Design and Algorithm

Hardware: The renewable resources considered in this project are solar power. The system will dynamically manage the electricity utilization with respect to a few parameters such as the availability of renewable resources, priority of devices, peak hour timings. The total load in a system is classified into three -critical, low and heavy, based on the wattage consumption. The controller will receive the current consumption from the current sensors and the current time (peak or off peak hours) from the real-time clock (RTC) and send this data to the controlling station, via RF module for load to battery power or AC mains as per the instruction from the MCU. The relay driver amplifies the current received from controller that will initiate the working of the relay system.

The power supply will not be interrupted during the switching since the relay system works with in a fraction of seconds. The display device will display the connected load and the mode of operation. With the help of a keypad device, the user can select the mode of operation and the type of loads that is to be operated with the battery power. Thus with the help of user interface, the consumer can select either manual or automatic mode. In manual mode, the user can select the load to switch to the battery power. And in the automatic mode, the system will get the peak hour from the smart meter and will perform as per the algorithm stored in MCU i.e., as per the previous agreement with the consumer or according to the behaviour of the consumer. The previous agreement between the consumer and utility takes into account the total load that can be connected, the peak hour etc. So depending on the time and the consumption of power, the system will look for the battery power. And if the battery power is enough to run a particular type of device (critical, heavy or low) then the system will switch to the stored power for the use of that particular device with the help of relay systems.

Algorithm: The algorithms discussed are for testing the basic capabilities of the system, such as decision making: if the consumption is more during peak hours, less storage power, storage is full; AC power is not available and varying battery power. The relays in the system, will select the power source for devices as per the instructions from MCU based on the total consumption and time. The threshold for total consumption of loads for each consumer is set based on the slab (allowable usage for consumers as decided by the authorities). The threshold we chose is less than the slab for every consumer, because by selecting the threshold under the slab we can reduce the consumption from AC mains. The system will get the total consumption and the time from the RTC and sensors (or from smart meter). Then the system will check for the peak time, if the time is peak time and the battery is charged from the renewable resource has power, (more than 50 percentage of its capacity) to drive the devices in use, then the relay system will select the power source as battery power. The different cases for which the proposed algorithm works to test the basic capabilities of system are shown below.

Case 1: In the case of automatic mode of operation and the time is peak hour, then the system will look for the total consumption of loads. If the total consumption exceeds the threshold, then the system will check the battery power. If battery power is enough to run the critical loads, then the system will select the source for critical loads as battery power. If battery power is not enough to run the critical loads, then it will go for the heavy load and then for the low load. And the system will use the battery power till the battery power reaches 30 percentage of maximum storage. This is because we need to keep some back power for our use if a power failure occurs.

Case 2: In the case of automatic mode of operation and if the battery is fully charged, then the system will use the battery power for critical loads, till the battery power reaches 80 percentage and then grid power iarts used for critical loads.

Case 3: In the case of automatic mode of operation and if AC power is not there then the system will use the battery power to critical loads as these loads have high priority.
Case 4: In the case of Manual mode of operation the user can select the source of power for certain types of loads (critical, heavy etc.)

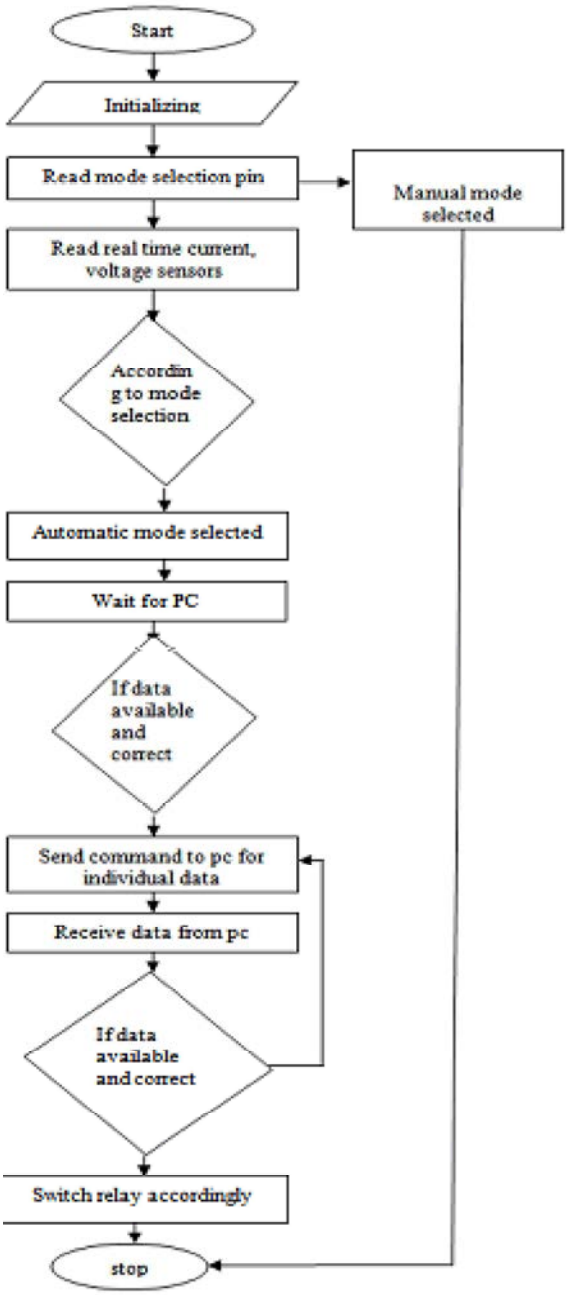

Fig. 3: Flow chart

Implementation and Test Results: We implemented our system in a test bed with some appliances connected. The appliances includes three bulbs of 100W (heavy load), 60W (medium load) and 40W (low load)in Matlab Simulink (shown in Fig. 4), by taking one of the inputs to power source as stored power from the photovoltaic system and other source as power from grid. and synchronised voltage and current obtained.

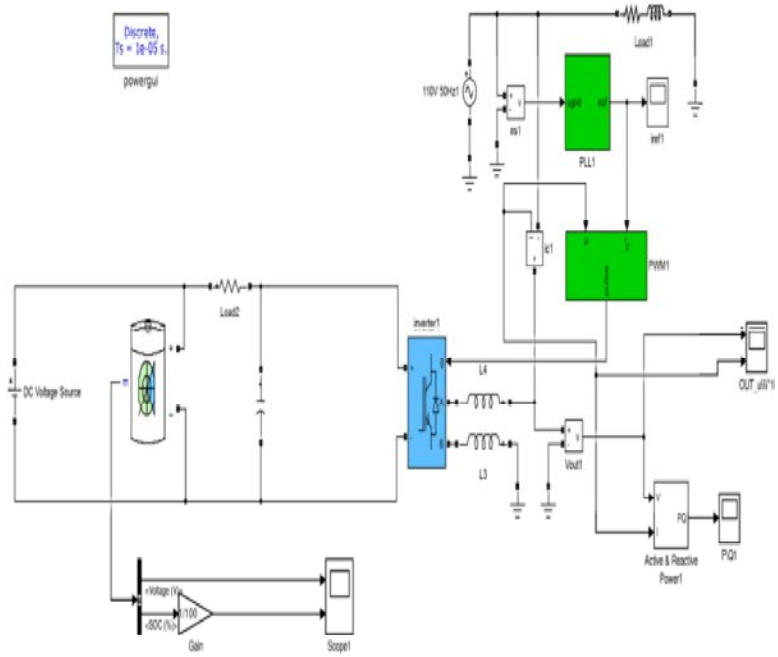

Fig. 4: Simulink model of synchronization of grid and battery supply.

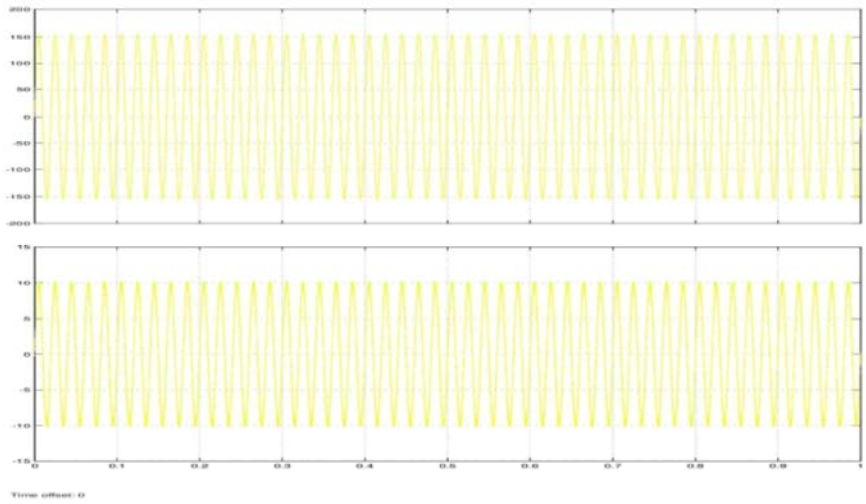

Fig. 5: Synchronised voltage and current

CONCLUSIONS

The proposed energy management system that will help to use the stored renewable power efficiently, there by dependency of the power from grid especially during peak hours can beminimized and result in reduction in the electricity bill of consumer. The system also maintains continuity of service for devices during power failure with high priority and the priority ofdevices will dynamically change with respect to the user behavior. Thus reducing dependency ofpower from grid means more consumers can be put on the grid so that electrification in India canbe completed. We implemented our system in a test bed and some basic system capabilities issimulated in Matlab Simulink also, the results show that dependency on power from the grid canbe reduced to 70-80% during peak hours, resulting in the reduction of the average daily consumption to less than 30% of normal consumption by using the stored renewable power atproper time.

REFERENCES

1. All India region wise Generating installed capacity of power. Central electric authority, Ministry of power, Government of India. January 2013.
2. Power Grid Corporation of India Limited. Our Network April 2013 http://www.powergridindia.com/_layouts/PowerGrid/User/ContentPage.aspx?PId=80&LangID=English
3. For India, a Power Failure Looms. The Wall Street Journal. 2 January 2012.
4. Aryadevi, R.D., S. Anilesh, Fabien Robert and Maneesha V. Ramesh, 2013. Smart Device for Optimal Use of Stored RenewablePower: IEEE 7th International Power Engineering and Optimization Conference, June 2013.
5. Chen Chen, Shalinee Kishore and Lawrence V. Snyder, 2010. An Innovative Rtp-Based Residential Power Scheduling Scheme ForSmart Grids: IEEE Trans. on Smart Grid, 1(2): 120.133.
6. Manisa Pipattanasomporn and Murat Kuzlu, 2012. An Algorithm for Intelligent Home Energy Management and Demand Response Analysis: IEEE Transactions on Smart Grid, 2012.
7. Piette, M.A., D. Watson, N. Motegi, S. Kiliccote and E. Linkugel, 2006. Automated demand response strategies and commissioning commercial building controls, Proc. 14th Natl. Conf. Building Commissioning, 2006-Apr.
8. Du, P. and N. Lu, 2011. Appliance commitment for household load scheduling, IEEE Trans. Smart Grid, 2: 411-419.
9. Muhammad Ali1, Z.A. Zaidi2, Qamar Zia1, M. Zakaria1, S.M. Ahsan1 and M. Rameez, 0000. Intelligent Load Management Scheme for a Residential Community in Smart Grids Network Using FEDRP: WSEAS Transactions On Power Systems.
10. Vuppala, S.K., K. Padmanabh, S.K. Bose, S. Paul, 2011. Incorporating fairness within Demand response programs in smart grid, in Proc. IEEE Innovative Smart Grid Technologies (ISGT), pp: 1-9.
11. Ghosh, S., X.A Sun and Xiaoxuan Zhang, 2012. Consumer profiling for demand response programs in smart grids, in Proc. IEEE Innovative Smart Grid Technologies - Asia (ISGT Asia), pp: 1-6.
12. Tanuja Bapat, Neha Sengupta, Sunil K. Ghai, Vijay Arya, Yedendra B. Shrinivasan and Deva Seetharam, 2009. User-sensitive Scheduling of Home Appliances: Journal of Computing and Information Science in Engineering, 9: 1-9.
13. Adika, Christopher O. and Lingfeng Wang, 2014. Smart charging and appliance scheduling approaches to demand side management, International Journal of Electrical Power and Energy Systems, 57: 232-240.
14. Lijesen, Mark G., 2007. The real-time price elasticity of electricity, Energy economics, 29(2): 249-258.
15. Rasheed, Muhammad Babar, NadeemJavaid, Ashfaq Ahmad, Zahoor Ali Khan, Umar Qasim and Nabil Alrajeh, 2015. An Efficient Power Scheduling Scheme for Residential Load Management in Smart Homes, Applied Sciences, 5(4): 1134-1163.