Middle-East Journal of Scientific Research 20 (8): 996-999, 2014
ISSN 1990-9233
© IDOSI Publications, 2014
DOI: 10.5829/idosi.mejsr.2014.20.08.114004

Wireless Sensor Network for Performance Monitoring of Electrical Machine

V. Jayalakshmi

Department of Electrical and Electronics Engineering,
Bharath University, India

Abstract: A novel wireless data collection for health monitoring system of electric machine based on wireless sensor network (ZigBee/IEEE802.15.4 Standard) is proposed and developed in this project. The unique characteristics of ZigBee networks such as low power, low cost and high flexibility make them ideal for this application. As the focus of this project, the hardware design and implementation of a multiple nodes Zigbee based wireless sensor network are discussed. To avoid unexpected equipment failures and obtain higher accuracy in diagnostic and prognostic for the health condition of a motor, efficient and comprehensive data collecting, monitoring and control play an important role to improve the system more reliable and effective Experimental results of the proposed wireless sensor network for its applicability to investigate different conditions such as electrical (voltage and current) and mechanical (temperature) faults are investigated.

Key words: Health monitoring system · Unique characteristics of ZigBee · Implementation of a multiple nodes

INTRODUCTION

On-line health monitoring of electric machine is an important means to prevent motor from unexpected failures to improve the system reliability and maintainability. Traditionally, data collecting/monitoring system is realized in wired systems formed by communication cables and various types of sensors. The cost of installation and maintenance these cables and sensors are more expensive than the cost of the sensors themselves. To overcome the restrictions of wired sensor networks, using wireless sensor networks for data collecting/monitoring is proposed. Wireless sensor network is a new control network that integrates sensor, embedded computer, wireless communication and distributed intelligent information processing technology. Its self-organization, adaptability and flexibility topology of network can greatly enhance reliability of health monitoring system [1-4]. ZigBee is a new wireless networking technology with low power, low cost and short time-delay characteristics. Based on ZigBee network communication technology, the system can deal with the various operating parameters of the remote transmission, real-time data collection and real-time health monitoring system. This paper proposes and develops a ZigBee base wireless sensor network for real-time health monitoring of electric machine. Experimental results demonstrate the capability of the proposed wireless sensor network to investigate different operating conditions such as electrical faults (current,voltage) and mechanical faults (temperature) [2-3].

These are the parameter to be measure from the substation. Potential Transformer used as a transducer to sense the incoming line voltage. Current Transformer used a transducer to sense the current Signal conditioning System [6-10]. As outputs from the transducer are in analog form and low voltage signals, it must be rectified and amplified before giving it to the dsPIC Microcontroller. For this a Full wave precision rectifier circuit using OPAMP are employed. The IC Used is LM1458. The Microcontroller is used to process the information like, uses its ADC to convert the incoming voltages and sending it to display and also sending required control signals to the relay and alarm. It also communicates with a ZigBee base wireless sensor network to send the information on or moniter. The microcontroller uses a RS232 level converter to send the signals to the mobile phone. All this work are done through a embedded software using C Language. A relay requires 12V DC to operate. But the microcontroller delivers a TTL Level signal which is 5 V DC. So a Relay driver circuit is needed to switch the voltage from 5VDC to 12VDC. For this a NPN Transistor is used. Relay is a magnetic switch, used to provide output only when

Corresponding Author: V. Jayalakshmi, Department of Electrical and Electronics Engineering, Bharath University, India.

Block Diagram

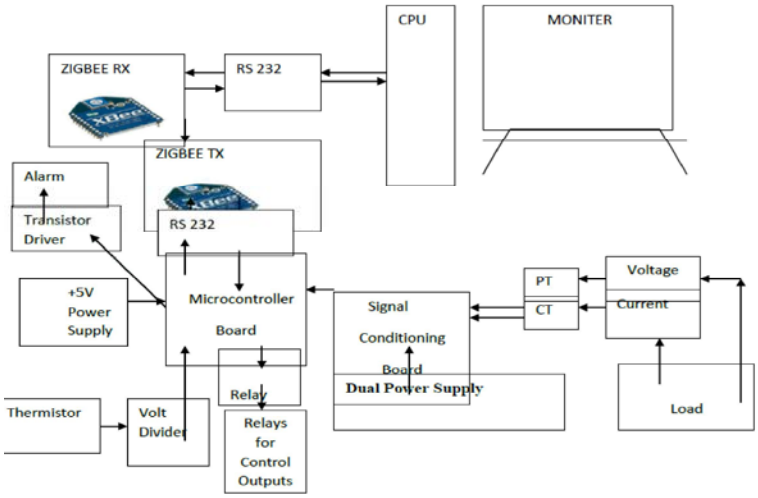

requied by the controller. For the signal conditioning circuit we have used LM1458 IC. The IC requires +12V and -12V for its operation. So we should have a Dual power supply to feed the IC LM1458. Alarm is a device which is used to produce sound when energized with proper power signals. Microcontroller requires +5V Power Supply to operate. So this +5V is generated from the incoming AC Supply. A 16X2 row LCD Display is used to display the parameters sensed and the events happening.

ZigBee Communication: ZigBee is a wireless technology developed as an open global standard to address the unique needs of low-cost, low-power wireless M2M networks. The ZigBee standard operates on the IEEE 802.15.4 physical radio specification and operates in unlicensed bands including 2.4 GHz, 900 MHz and 868 MHz. The 802.15.4 specification upon which the ZigBee stack operates gained ratification by the Institute of Electrical and Electronics Engineers (IEEE) in 2003. The specification is a packet-based radio protocol intended for low-cost, battery-operated devices [11]. The protocol allows devices to communicate in a variety of network topologies and can have battery life lasting several years.

Circuit Diagram

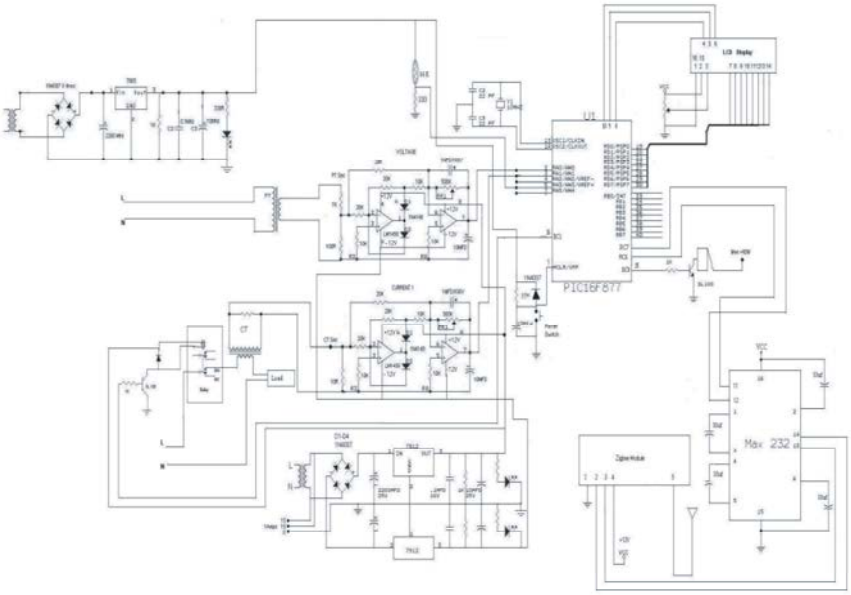

Voltage and current are the parameter to be measure from the substation Potential Transformer used as a transducer to sense the incoming line voltage. Current Transformer used a transducer to sense the current As outputs from the transducer are in analog form and low voltage signals, it must be rectified and amplified before giving it to the PIC Microcontroller. For this a Full wave precision rectifier circuit using OPAMP are employed. The IC Used is LM1458. For the signal conditioning circuit we have used LM1458 IC. The IC requires +12V and -12V for its operation. So we should have a Dual power supply to feed the IC LM1458. The Microcontroller is used to process the information like, uses its ADC to convert the incoming voltages and sending it to display. It also communicates with a Zig Bee, it is a new wireless networking technology with low power, low cost and short time-delay characteristics Based on ZigBee network communication technology, the system can deal with the various operating parameters of the remote transmission, real-time data collection and real-time health monitoring system to send the information on a LCD OR MONITER. The microcontroller uses a RS232 level converter to send the signals to the zig bee[12]. All this work are done through a embedded software using C Language. Relay is a magnetic switch, used to provide output only when requied by the controller. A relay requires 12V DC to operate. But the microcontroller delivers a TTL Level signal which is 5 V DC. So a Relay driver circuit is needed to switch the voltage from 5VDC to 12VDC. Alarm is a device which is used to produce sound when energized with proper power signals. A alarm requires 12V DC to operate [13]. But the microcontroller delivers a TTL Level signal which is 5 V DC. So a Alarm driver circuit is needed to switch the voltage from 5VDC to 12VDC. For this a NPN Transistor is used. The Zig Bee protocol has been created and ratified by member companies of the Zig Bee Alliance. Over 300 leading semiconductor manufacturers, technology firms, OEMs and service companies comprise the ZigBee Alliance membership. The Zig Bee protocol was designed to provide an easy-to-use wireless data solution characterized by secure, reliable wireless network architectures. The ZigBee protocol is designed to communicate data through hostile RF environments that are common in commercial and industrial applications. Digi is a member of the ZigBee Alliance and has developed a wide range of networking solutions based on the ZigBee protocol. XBee and XBee-PRO modules and other XBee-enabled devices provide an easy-to-implement solution that provides functionality to connect to a wide variety of devices. A key component of the ZigBee protocol is the ability to support mesh networking. In a mesh network, nodes are interconnected with other nodes so that multiple pathways connect each node. Connections between nodes are dynamically updated and optimized through sophisticated, built-in mesh routing table. Mesh networks are decentralized in nature; each node is capable of self-discovery on the network [14]. Also, as nodes leave the network, the mesh topology allows the nodes to reconfigure routing paths based on the new network structure. The characteristics of mesh topology and ad-hoc routing provide greater stability in changing conditions or failure at single nodes.

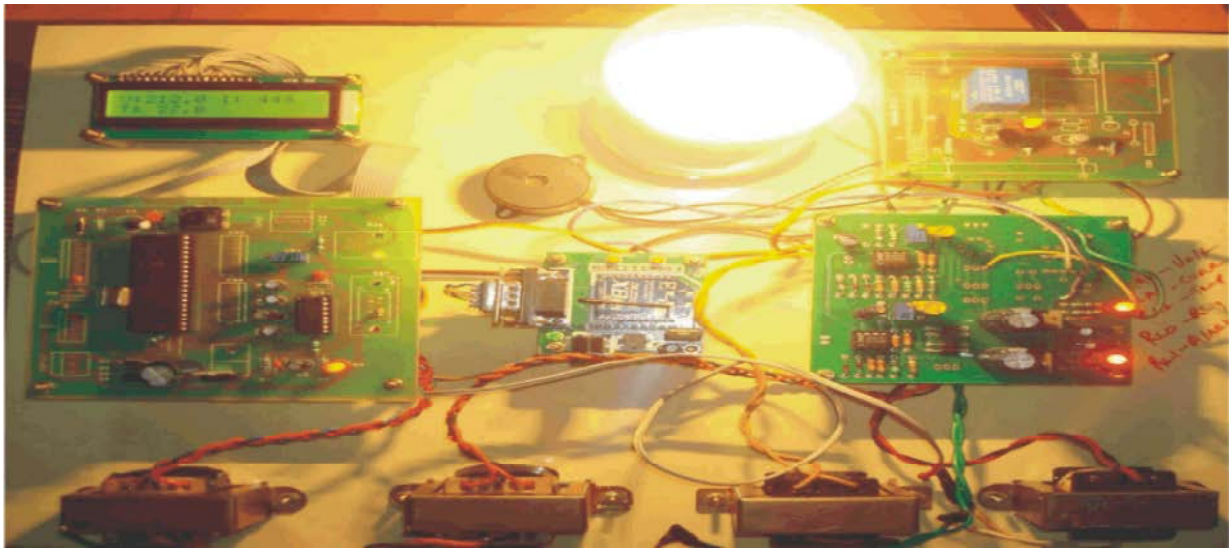

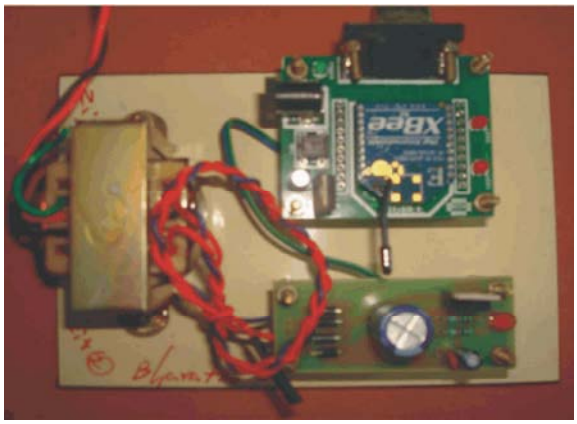

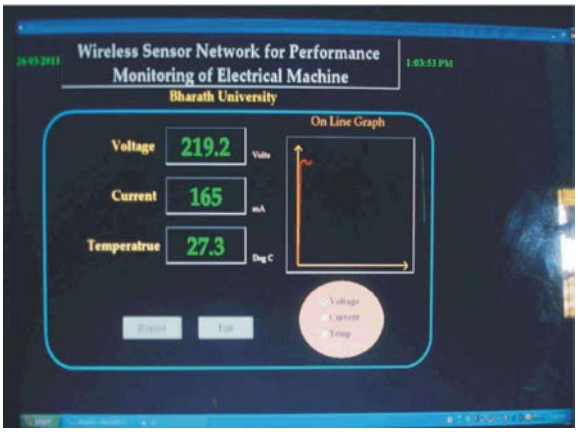

CONCLUSION

In this project we have presented the design and implementation of a ZigBee communication protocol for performance monitoring of electrical machine. Thus this design helps us to avoid unexpected equipment failures and obtain higher accuracy in diagnostic and prognostic for the health condition of any machine. By using this design we can easily determine the various parameters such as current, voltage and temperature of any electrical machine through wireless network. These parameters are displayed on the personal computer This is a real time moniterable system developed with simple hardware which simplifies the pre-detection of faults in electrical machine. Due to the use of ZigBee protocol, the cost of this design becomes low compare to cost of installation and maintenance of cables which are more expensive than the cost of the sensors themselves. User can monitor the various parameters such as voltage current and temperature which are displayed on the personal computer. This system can be easily implemented with maximum reliability with low cost. It is a special enhancement from the existing systems for health monitoring of electrical machines.

REFERENCES

1. John, B. Peatman, 1989. Design With Microcontrollers, McGraw Hill International Ltd.
2. Milliman and C.C. Halkias, Integrated Electronics. McGraw.
3. Embedded C Coding Standard, by Michael Barr.
4. Programming Embedded Systems: With C and GNU Development Tools, 2nd Edition, by Michael Barr and Anthony Massa.
5. Hosticka, B.J., Analog Circuits For Sensors" Inst. Of Conf. On Telecommunication
6. http://www.digi.com/
7. http://www.ikalogic.com/
8. http://www.nxp.com/
9. http://www.wikipedia.org/
10. Jayalakshmi, V. and N.O. Gunasekar, 2013. Implementation of discrete PWM control scheme on Dynamic Voltage Restorer for the mitigation of voltage sag /swell, 2013 International Conference on Energy Efficient Technologies for Sustainability, ICEETS, pp: 1036-1040.
11. Uma Mageswaran, S. and N.O. Guna Sekhar, 2013. Reactive power contribution of multiple STATCOM using particle swarm optimization, International Journal of Engineering and Technology, 5(1): 122-126.
12. Arumugam, S. and S. Ramareddy, 2012. Simulation comparison of class D/ Class E inverter fed induction heating, Journal of Electrical Engineering, 12(2): 71-76.
13. Nagarajan, C. and M. Madheswaran, 2012. Experimental study and steady state stability analysis of CLL-T series parallel resonant converter with fuzzy controller using state space analysis, Iranian Journal of Electrical and Electronic Engineering, 8(3): 259-267.
14. Ramkumar Prabhu, M., V. Reji and A. Sivabalan, 2012. Improved radiation and bandwidth of triangular and star patch antenna, Research Journal of Applied Sciences, Engineering and Technology, 4(12): 1740- 1748.